IJRAME

INTERNATIONAL JOURNAL OF RESEARCH IN AERONAUTICAL AND MECHANICAL ENGINEERING
WWW.IJRAME.COM
ISSN (ONLINE): 2321-3051

Vol.12 Issue 12, December 2024
Pg:- 17 - 35

DESIGN AND ANALYSIS OF SUBMARINE SHELL

Dhruv Padhi[1], Prathamesh Sapale[2], Aman Surani[3], Aniket Khairnar[4]

1, 2, 3, 4 Department of Aerospace Engineering, Sandip University, Nashik, Maharashtra

Abstract

This project dives into the design and analysis of submarine hulls, critical components that safeguard crew members and facilitate mission success. Traditionally, these hulls are constructed from high-strength, weldable materials such as HY-steel. Engineers typically rely on established methods and software to analyze the hydrodynamic performance of these shells, focusing on factors like drag and lift. However, this project proposes a new approach that incorporates bio mimicry, drawing inspiration from nature's strong and lightweight structures. Implementing bio mimicry in submarine shell design is anticipated to necessitate the development of novel material analysis techniques and specialized computational fluid dynamics (CFD) models. By comparing the performance of traditional hull designs with those inspired by bio mimicry in terms of drag, lift, and manoeuvrability, this research aims to identify significant advancements in submarine shell technology.

Keywords: Submarine hull design, Bio mimicry, Hydrodynamic performance, Computational fluid dynamics (CFD), Material analysis

1. Introduction

The design and construction of submarine shells are pivotal for enabling safe and effective aquatic operations, furnishing structural integrity, buoyancy, and protection against extreme ocean pressures. Historically, these shells have evolved from simple rustic frames to advanced structures made from high- strength sword, titanium blends, and mixes, icing continuity and covert but frequently compromising manoeuvrability and effectiveness due to their weight. This exploration explores a transformative approach by incorporating bio mimicry, inspired by natures effective and feather light designs, and using advancements in accoutrements wisdom and computational fluid dynamics (CFD) modeling. The idea is to develop lighter, stronger, and more hydro dynamically effective submarine shells while comparing their performance to traditional designs in terms of drag, lift, and project. By integrating sustainability and fostering innovative engineering practices, this study aims to optimize submarine performance and inspire advancements in aquatic technology, paving the way for unborn inventions in disquisition, exploration, and functional effectiveness in grueling marine surroundings.

IJRAME

INTERNATIONAL JOURNAL OF RESEARCH IN AERONAUTICAL AND MECHANICAL ENGINEERING
WWW.IJRAME.COM
ISSN (ONLINE): 2321-3051

Vol.12 Issue 12, December 2024
Pg:- 17 - 35

2. CFD Analysis

2.1 Introduction

CFD(Computational Fluid Dynamics) is a numerical system used to pretend and study fluid inflow, heat, and mass transfer by working the Navier- Stokes equations, which describe fluid stir. These equations, coupled with fresh models for goods like turbulence or heat transfer, are answered across a grid of cells using styles similar as Finite Element (FEM) or Finite Volume system (FVM). The delicacy of CFD depends on grid resolution and computational complexity. Extensively used in diligence, CFD is cost-effective and offers lesser delicacy than physical testing styles like wind coverts, particularly in replicating real- world conditions.

2.2CFD for Submarine

Computational Fluid Dynamics(CFD) is a critical tool in submarine design and analysis, bluffing fluid inflow to optimize hydrodynamic performance. By working the Navier- Stokes and durability equations, CFD provides perceptivity into drag, lift, inflow separation, and other factors, enabling masterminds to upgrade housing shapes for bettered effectiveness. Numerical styles similar as Finite Volume and Finite Element are used to discretize these equations, with applicable boundary conditions for haste, pressure, and turbulence characteristics.

Advanced turbulence models, including Reynolds- Averaged Navier- Stokes(RANS) and Large Eddy Simulation(LES), prisoner boundary subcaste goods, while free- face conditions regard for relations near the water face. confirmation against experimental or logical data ensures delicacy and trustability. CFD's capability to pretend complex inflow dynamics makes it necessary for submarine design and performance evaluation.

Purpose of CFD

This study uses CFD to dissect inflow around a introductory submarine shell, fastening on 3D simulations to uncover detailed performance criteria. While computationally ferocious, 3D analysis provides further comprehensive perceptivity than 2D styles and serves as a foundation for validating results through wind tunnel tests.

CFD Approach

The CFD analysis followed these procedural steps:

1. Define modeling goals and create a model.
2. Generate a mesh for the geometry.
3. Configure solver settings and boundary conditions.
4. Compute and monitor the solution.
5. Analyze and save results, refining parameters as needed.

The figure was modeled and meshed using ICEM CFD, and simulations were performed with CFX as the solver. This structured approach ensures accurate analysis of inflow dynamics around the submarine shell.

IJRAME

INTERNATIONAL JOURNAL OF RESEARCH IN AERONAUTICAL AND MECHANICAL ENGINEERING
WWW.IJRAME.COM
ISSN (ONLINE): 2321-3051

Vol.12 Issue 12, December 2024
Pg:- 17 - 35

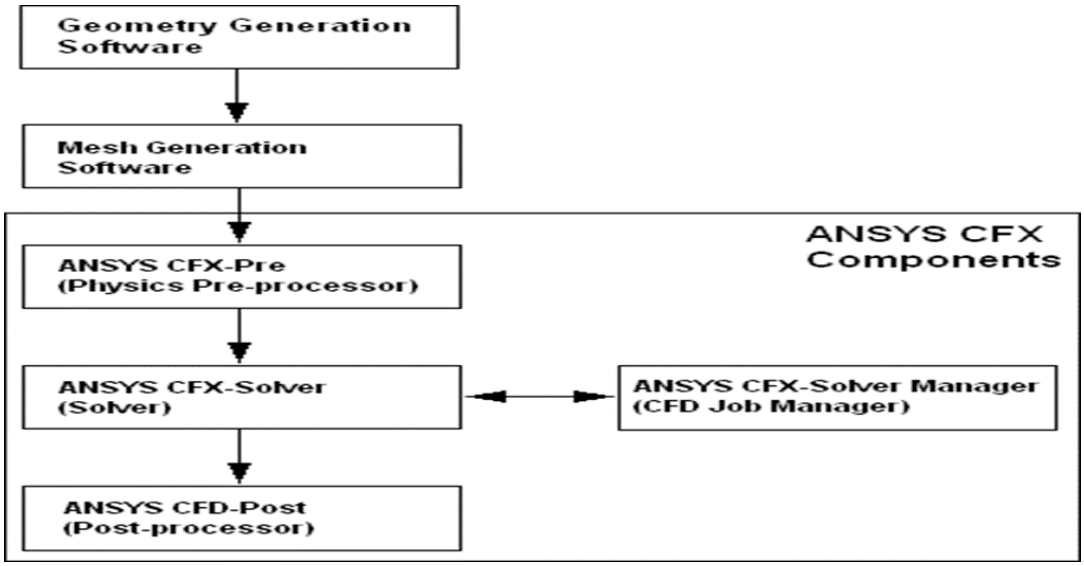

Fig 2.2(a) CFD flow chart in ANSYS

2.3Numerical descretization

Analytical solutions to the Navier-Stokes equations exist for only the simplest of flows under ideal conditions. To obtain solutions for real flows, a numerical approach must be adopted whereby the equations are replaced by algebraic approximations that can be solved using a numerical method.

Discretization of the Governing Equations ANSYS CFX uses an element-based finite volume method, which first involves discretizing the spatial domain using a mesh. The mesh is used to construct finite volumes, which are used to conserve relevant quantities such as mass, momentum, and energy. The mesh is three dimensional, but for simplicity we will illustrate this process the for two dimensions. The figure below shows a typical two- dimensional mesh. All solution variables and fluid properties are stored at nodes (mesh vertices). A control volume (the shaded area) is constructed around each mesh node using the median dual (defined by lines joining the centres of the edges and element centres surrounding the node).

IJRAME

INTERNATIONAL JOURNAL OF RESEARCH IN AERONAUTICAL AND MECHANICAL ENGINEERING
WWW.IJRAME.COM
ISSN (ONLINE): 2321-3051

Vol.12 Issue 12, December 2024
Pg:- 17 - 35

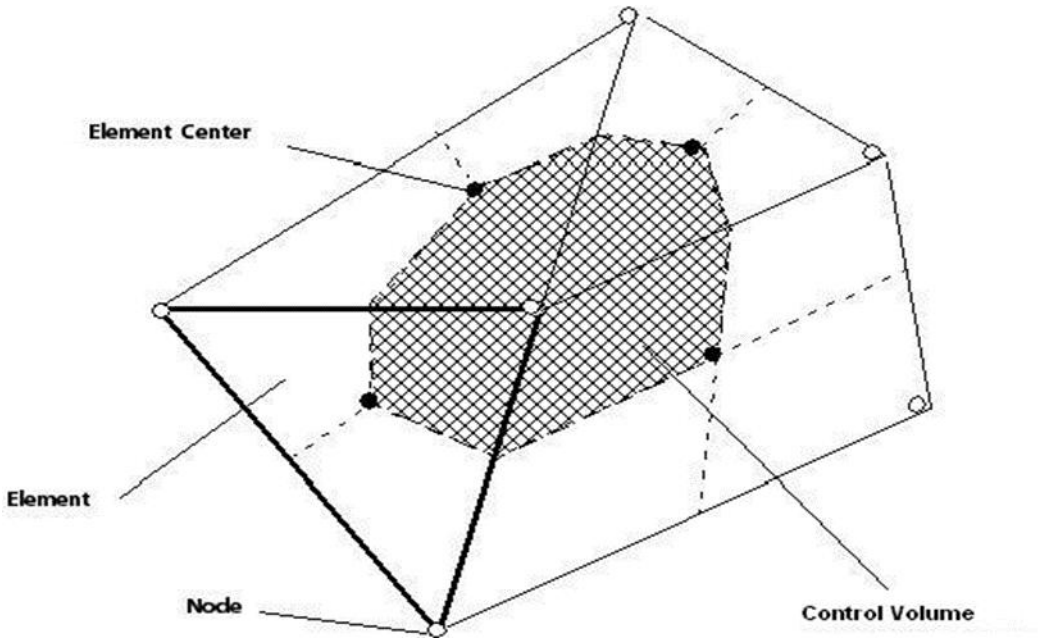

Fig 2.3(a) Control volume definition

To illustrate the finite volume methodology, consider the conservation equations for mass, momentum, and a passive scalar, expressed in Cartesian coordinates:

$$\frac{\partial \rho}{\partial t} + \frac{\partial}{\partial x_j}(\rho U_j) = 0$$

$$\frac{\partial}{\partial t}(\boldsymbol{\rho U_i}) + \frac{\partial}{\partial x_j}(\boldsymbol{\rho U_j} U_i) = -\frac{\partial P}{\partial x_j} + \frac{\partial}{\partial x_j}\left[\mu_{eff}\left[\frac{\partial U_i}{\partial x_j} + \frac{\partial U_j}{\partial x_i}\right]\right]$$

$$\frac{\partial}{\partial t}(\rho\varphi) + \frac{\partial}{\partial x_j}(\rho U_j \varphi) = \frac{\partial y}{\partial x_j}\left[\neg_{eff}\left[\frac{\partial \varphi}{\partial x_i}\right]\right] dn_j + S_\varphi$$

These equations are integrated over each control volume, and Gauss' Divergence Theorem is applied to convert volume integrals involving divergence and gradient operators to surface integrals. If control volumes do not deform in time, then the time derivatives can be moved outside of the volume integrals and the integrated equations become:

$$\frac{\partial}{\partial t}\int_V^0 v\rho dV + \int_s^0 \rho U_j dn_j = 0$$

$$\frac{\partial}{\partial t}\int_V U_i \rho dV + \int_s \rho U_j U_i dn_j = -\int_S \left[\mu_{eff}\left[\frac{\partial U_i}{\partial x_j} + \frac{\partial U_j}{\partial x_i}\right]\right] dn_j + \int_S SU_i dV$$

$$\frac{\partial}{\partial t}\int_V \rho\varphi dV + \int_S \left[\neg_{eff}\left[\frac{\partial \varphi}{\partial x_j}\right]\right] dn_j + \int_V S_\varphi dV$$

where V and s respectively denote volume and surface regions of integration, and dnj are the differential Cartesian components of the outward normal surface vector. The volume integrals represent source or accumulation terms, and the surface integrals represent the summation of the fluxes. Note that changes to these equations need some generalization to account for mesh deformation. The next step in the numerical algorithm is to discretize the volume and surface integrals. To illustrate this step, consider a single element like the one shown below.

Volume integrals are discretized within each element sector and accumulated to the control volume to which the sector belongs. Surface integrals are discretized at the integration points (ipn) located at the center of each surface segment within an element and then distributed to the adjacent control volumes. Because the surface integrals are equal and opposite for control volumes adjacent to the integration points, the surface integrals are guaranteed to be locally conservative.

After discretizing the volume and surface integrals, the integral equations become:

$$V\left[\frac{\rho-\rho^0}{\Delta t}\right] + \sum_{ip} m_{ip} = 0$$

$$V\left[\frac{\rho U_i - \rho^0 U_i^0}{\Delta t}\right] + \sum_{ip} m_{ip}(U_i) = \sum_{ip}\left(\left[\mu_{eff}\left[\frac{\partial U_i}{\partial x_j} + \frac{\partial U_j}{\partial x_i}\right]\right]\right) + S_{U_i}V$$

$$V\left[\frac{\rho\varphi - \rho^0\varphi^0}{\Delta t}\right] + \sum_{ip} m_{ip}\varphi_{ip} = \sum_{ip}\left(\neg_{eff}\left[\frac{\partial \varphi}{\partial x_i}\right]\Delta n_j\right) + S_\varphi V$$

Wheremip = $(\rho Uj\Delta nj)ip$, V is the control volume, Δt is the time step, Δn j is the discrete outward surface vector the subscript ip denotes evaluation at an integration point, summations are over all the integration points of the control volume, and the superscript o refers to the old time level. Note that the First Order

Backward Euler scheme has been assumed in these equations, although a second order scheme is usually preferable for transient accuracy.

2.4 General Solution

The solution of each set of field equations consists of two numerically intensive operations. For each time step:

1. Coefficient Generation: The non-linear equations are linearized and assembled into the solution matrix.
2. Equation Solution: The linear equations are solved using an Algebraic Multigrid method.

When solving fields in the CFX-Solver, the outer (or time step) iteration is controlled by the physical time scale or time step for steady and transient analyses, respectively. Only one inner (linearization) iteration is performed per outer iteration in steady state analyses, whereas multiple inner iterations are performed per time step in transient analyses.

2.5 Linear Equation Solution

ANSYS CFX uses a Multigrid (MG) accelerated Incomplete Lower Upper (ILU) factorization technique for solving the discrete system of linearized equations. It is an iterative solver whereby the exact solution of the equations is approached during the course of several iterations.

The linearized system of discrete equations described above can be written in the general matrix form:

$$[A][\varphi]= [b]$$

Where [A] is the coefficient matrix, [φ] the solution vector and [b] is constant vector. The above equation can be solved iteratively by starting with an approximate solution, φn, that is to be improved by a correction, φ', to yield a better solution, , φn+1, that is,

$$\varphi n+1= \varphi n+\varphi'$$

where φ' is a solution of

$$A\ \varphi'=rn$$

With rn the residual obtained from

$$rn=b-A\ \varphi n$$

IJRAME

INTERNATIONAL JOURNAL OF RESEARCH IN AERONAUTICAL AND MECHANICAL ENGINEERING
WWW.IJRAME.COM
ISSN (ONLINE): 2321-3051

Vol.12 Issue 12, December 2024
Pg:- 17 - 35

Repeated applications of this algorithm will yield a solution of the desired accuracy.

By themselves, iterative solvers such as ILU tend to rapidly decrease in performance as the number of computational mesh elements increases. Performance also tends to rapidly decrease if there are large element aspect ratios present.

2.6 Turbulence modeling

Turbulence is very important in the calculation of drag. Pressure and velocity will have small variations that would change to fit the turbulent flow going around any object in a flow stream. The changes have to be as accurate as possible to get the proper results. Different models would give different results, and each model is suitable for different types of flow according to the conditions established. The most basic equation for turbulent kinetic energy used in almost all of the turbulence models is the following:

$$\frac{dk}{dt} + U_j \frac{dk}{dx_j} = \tau_{ij} \frac{\partial U_i}{\partial x_j} - \in + \frac{\partial}{\partial x_j} [(v + v_T/\sigma_{k)} \frac{\partial k}{\partial x_j}]$$

Reynolds stress model (RSM)

- Detached eddy simulation (DES) model
- Large eddy simulation (LES) model for modeling turbulence the following choices are available:
- Spalart-Allmaras model (S-A)
- k – ε models
- k – ω models
- Shear stress transport (SST)

The S-A, k – ε and k – ω models and their variations are Reynolds Average Navier Stokes (RANS). S-A is a one equation model while k – ε and k – ω are two equation models. In LES model the large eddies are explicitly calculated being more accurate but more computer resource demanding.

INTERNATIONAL JOURNAL OF RESEARCH IN AERONAUTICAL AND MECHANICAL ENGINEERING
WWW.IJRAME.COM
ISSN (ONLINE): 2321-3051

Vol.12 Issue 12, December 2024
Pg:- 17 - 35

K-epsilon (k-ε) turbulence model is the most common model used in Computational Fluid Dynamics (CFD) to simulate mean flow characteristics for turbulent flow conditions. It is a two equation model which gives a general description of turbulence by means of two transport equations (PDEs). The original impetus for the K-epsilon model was to improve the mixing-length model, as well as to find an alternative to algebraically prescribing turbulent length scales in moderate to high complexity flows.

The first transported variable determines the energy in the turbulence and is called turbulent kinetic energy (k). The second transported variable is the turbulent dissipation which determines the rate of dissipation of the turbulent kinetic energy.

SST (Menter's Shear Stress Transport) turbulence model is a widely used and robust two-equation eddy-viscosity turbulence model used in Computational Fluid Dynamics. The model combines the k- omega turbulence model and K-epsilon turbulence model such that the k-omega is used in the inner region of the boundary layer and switches to the k-epsilon in the free shear flow. So, in the present analysis it is compared with SST and k – ε in considering the computational sources and complexity of problem.

3. Methodology

3.1 Geometry

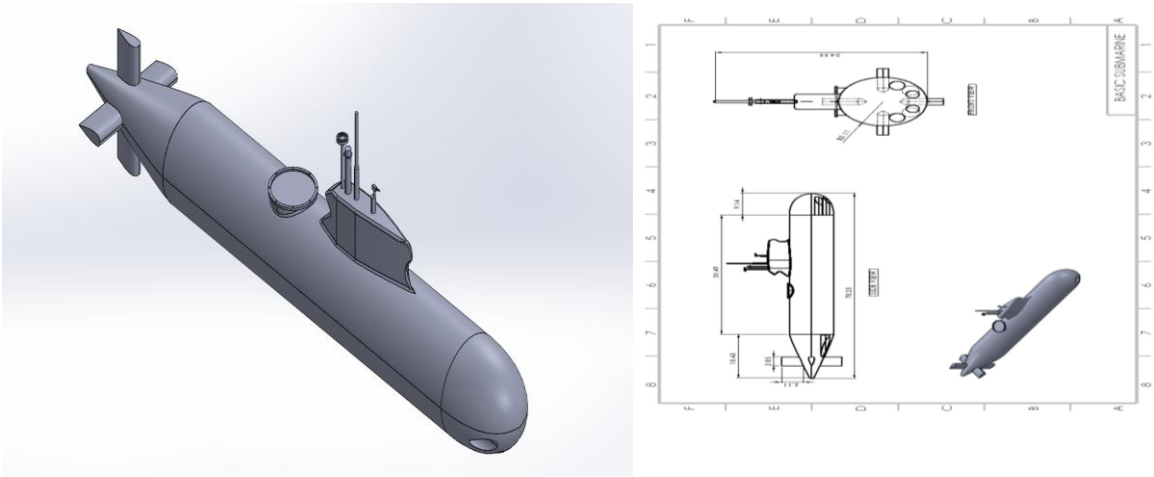

Figure 3.1.1(a) Traditional Submarine Shell Design

INTERNATIONAL JOURNAL OF RESEARCH IN AERONAUTICAL AND MECHANICAL ENGINEERING
WWW.IJRAME.COM
ISSN (ONLINE): 2321-3051

Vol.12 Issue 12, December 2024
Pg:- 17 - 35

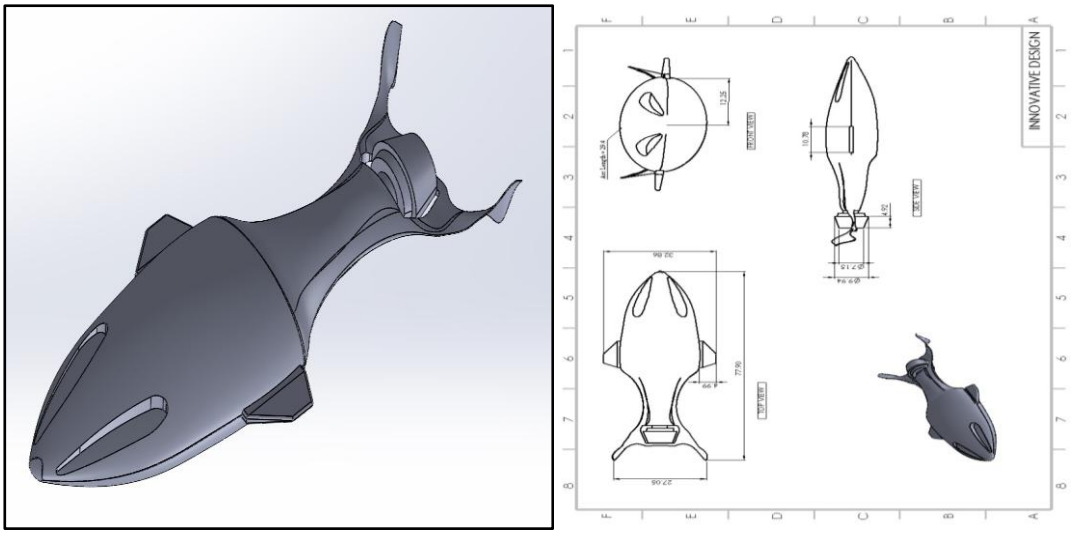

Figure 3.1.1(b) Innovative Submarine Design

3.2Meshing

3.2.1Mesh for Traditional Submarine

For the analysis of traditional submarine, we will start workbench.

1. We have made our designs in solid works the design with dimensions are mentioned above so after importing the geometry we will create a domain and Boolean subtract it. Target body – domain and tool body – submarine.
2. Go to mesh.
3. The first step in mesh we will be giving names inlet, outlet, walls and submarine to the respective ends.
4. After that we are going to give element size – 2.9 m to our geometry.
5. Generate mesh.

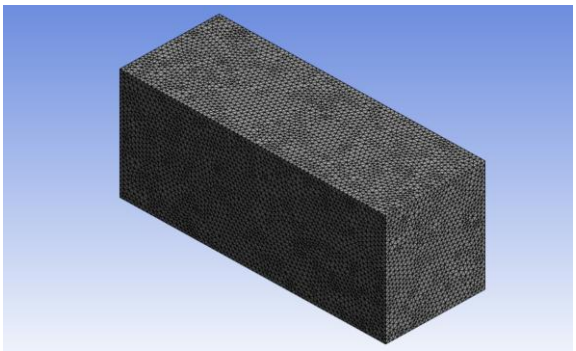

Fig 3.2.1(a): Mesh of domain

Statistics	
Nodes	2463088
Elements	1756773
Show Detailed Statistics	No

INTERNATIONAL JOURNAL OF RESEARCH IN AERONAUTICAL AND MECHANICAL ENGINEERING
WWW.IJRAME.COM
ISSN (ONLINE): 2321-3051

Vol.12 Issue 12, December 2024
Pg:- 17 - 35

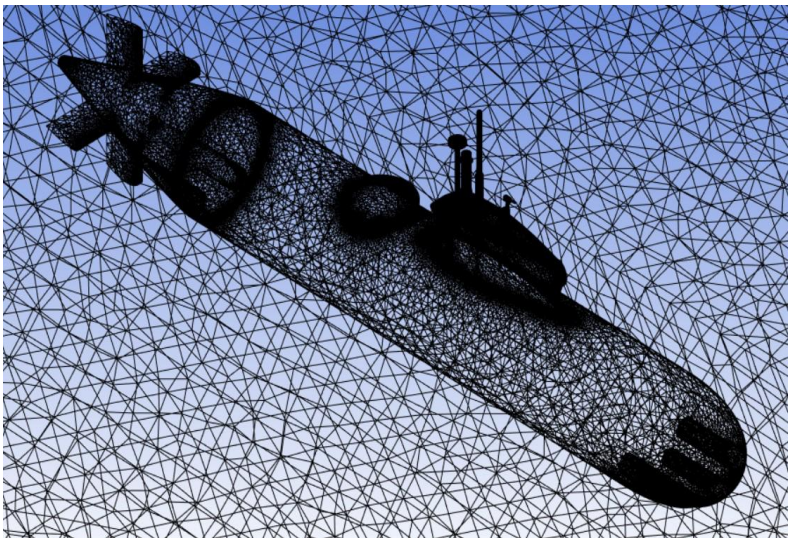

Fig 3.2.1(b): Mesh of Traditional Submarine

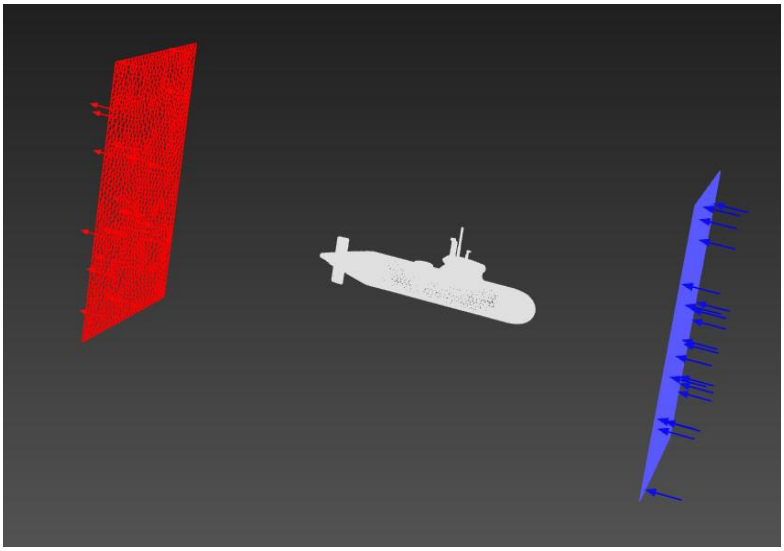

Fig 3.2.1(c): Mesh of Traditional Submarine

3.2.2Mesh for Innovative Submarine

For the analysis of traditional submarine, we will start workbench.

IJRAME

INTERNATIONAL JOURNAL OF RESEARCH IN AERONAUTICAL AND MECHANICAL ENGINEERING
WWW.IJRAME.COM
ISSN (ONLINE): 2321-3051

Vol.12 Issue 12, December 2024
Pg:- 17 - 35

1. We have made our designs in solid works the design with dimensions are mentioned above so after importing the geometry we will create a domain and Boolean subtract it. Target body – domain and tool body – submarine.
2. Go to mesh.
3. The first step in mesh we will be giving names inlet, outlet, walls and submarine to the respective ends.
4. After that we are going to give element size – 38 m to our geometry.
5. Generate mesh.

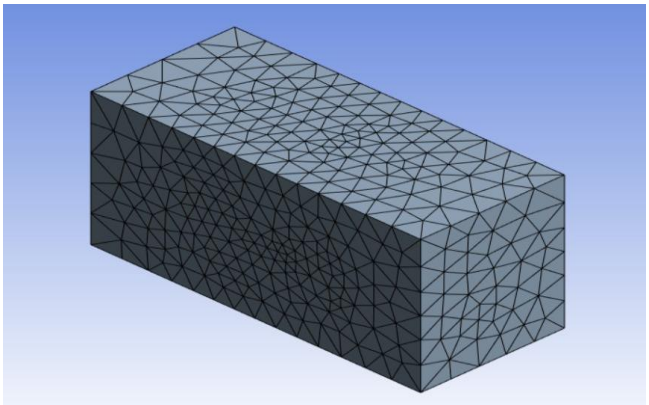

Fig 3.2.2(a): Mesh of domain

Statistics	
Nodes	102836
Elements	571853
Show Detailed Statistics	No

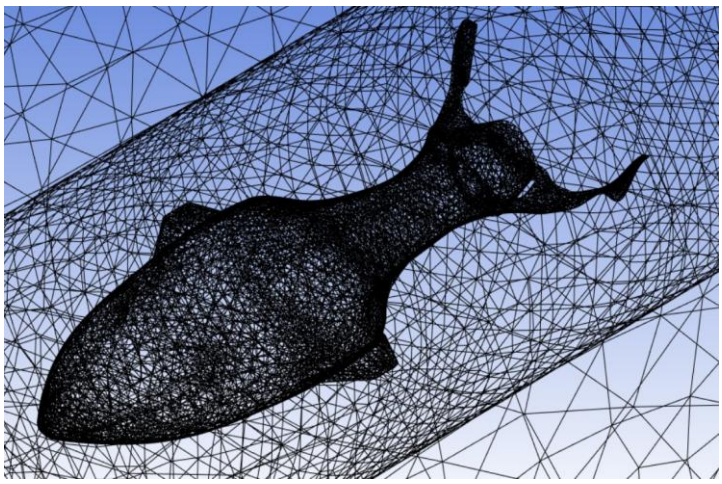

Fig 3.2.2(b): Mesh of Innovative Submarine

IJRAME

INTERNATIONAL JOURNAL OF RESEARCH IN AERONAUTICAL AND MECHANICAL ENGINEERING
WWW.IJRAME.COM
ISSN (ONLINE): 2321-3051

Vol.12 Issue 12, December 2024
Pg:- 17 - 35

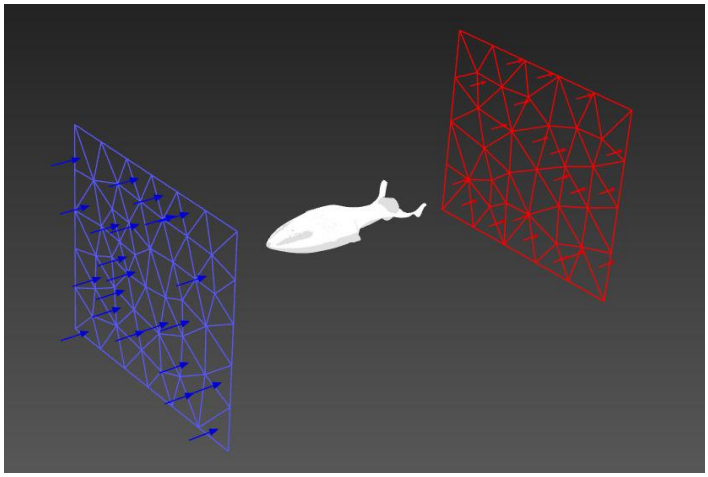

Fig 3.2.2(c): Mesh of Innovative Submarine

3.3Lift and drag calculation

Drag formula = D = $\frac{1}{2}\ \rho\ V^2\ S\ C_D$

Lift formula = L = $\frac{1}{2}\ \rho\ V^2\ S\ C_L$

D – Drag

L- Lift

ρ – Density Of Water

V – Velocity

S – Surface Area

C_D – Coefficient Of Drag (value taken form ansys fluent)

D = $\frac{1}{2}\ \rho\ V^2\ S\ C_D$

D = $\frac{1}{2}$ x 998 x 8.904 x 8.904 x (3.14x 5.11x5.11) x 11.3982

= 30567146.0345 N

INTERNATIONAL JOURNAL OF RESEARCH IN AERONAUTICAL AND MECHANICAL ENGINEERING
WWW.IJRAME.COM
ISSN (ONLINE): 2321-3051
Vol.12 Issue 12, December 2024
Pg:- 17 - 35

= 30567.146 KN

Lift formula = L = $\frac{1}{2}\ \rho\ V^2\ S\ C_L$

L = $\frac{1}{2}\ \rho\ V^2\ S\ C_L$

L = $\frac{1}{2}$ x 998 x 8.904 x 8.904 x (3.14x 5.11x5.11) x 1.7146

L = 4598132.03756 N

L = 4598.132 KN

4. Results

4.1 Traditional submarine

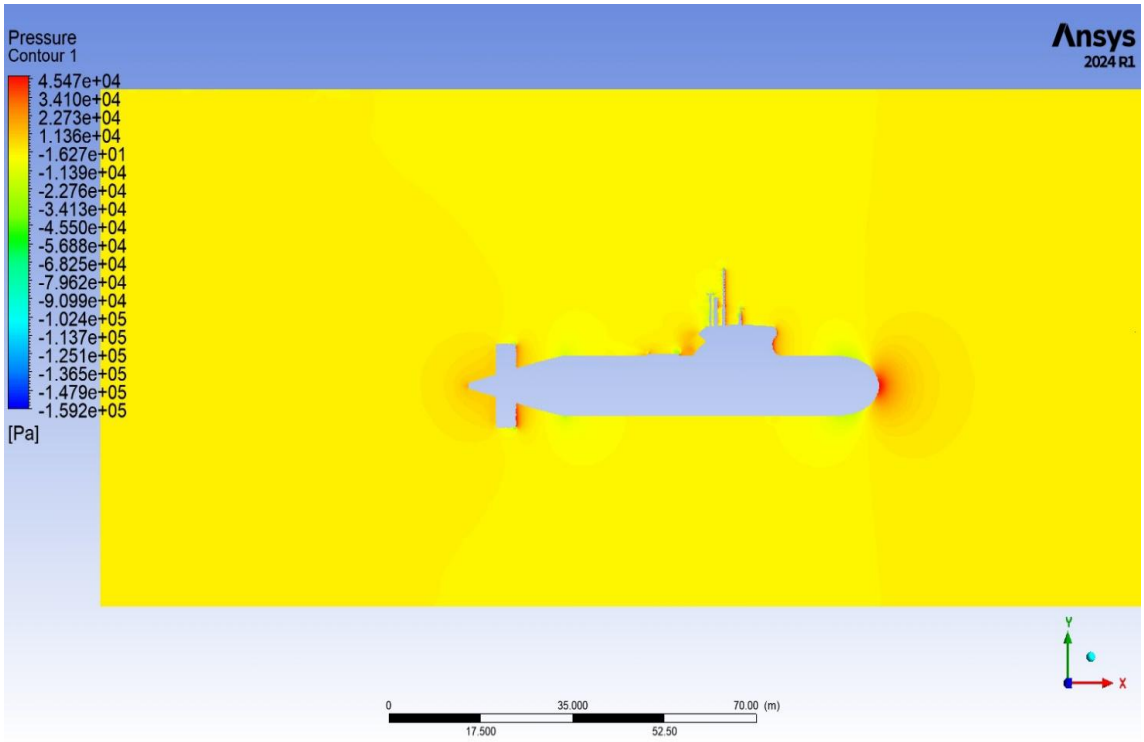

Figure 4.1(a) pressure contours of traditional submarine

INTERNATIONAL JOURNAL OF RESEARCH IN AERONAUTICAL AND MECHANICAL ENGINEERING
WWW.IJRAME.COM
ISSN (ONLINE): 2321-3051

Vol.12 Issue 12, December 2024
Pg:- 17 - 35

At the front of the submarine, we are getting pressure of 4.547 x 10^4 Pa

At the center of the submarine, we getting the pressure between 1.136 x 10^4 to -1.13 x 10^4

At the end we are getting the pressure of 2.27 x 10^4

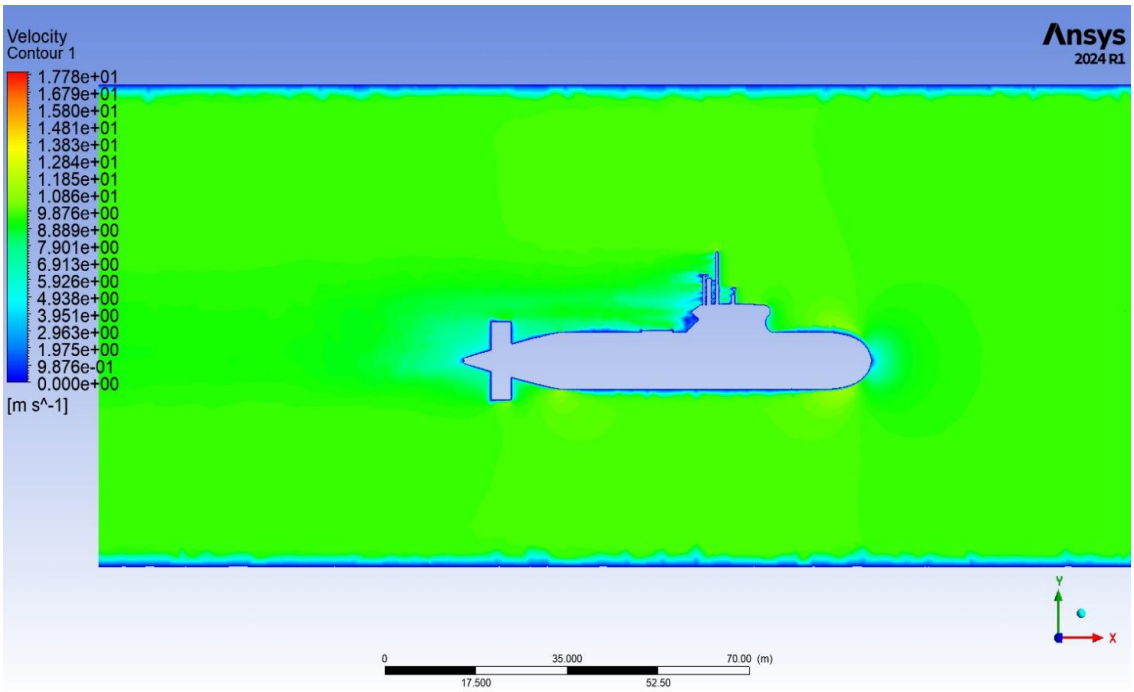

Figure 4.1(b) Velocity contours of traditional submarine

In this result we see that the maximum velocity is 9.87 m/s which forms a boundary layer around the submarine we can even see vortexes being formed at the end of the submarine and sail of the submarine.

INTERNATIONAL JOURNAL OF RESEARCH IN AERONAUTICAL AND MECHANICAL ENGINEERING
WWW.IJRAME.COM
ISSN (ONLINE): 2321-3051

Vol.12 Issue 12, December 2024
Pg:- 17 - 35

4.2 Innovative submarine

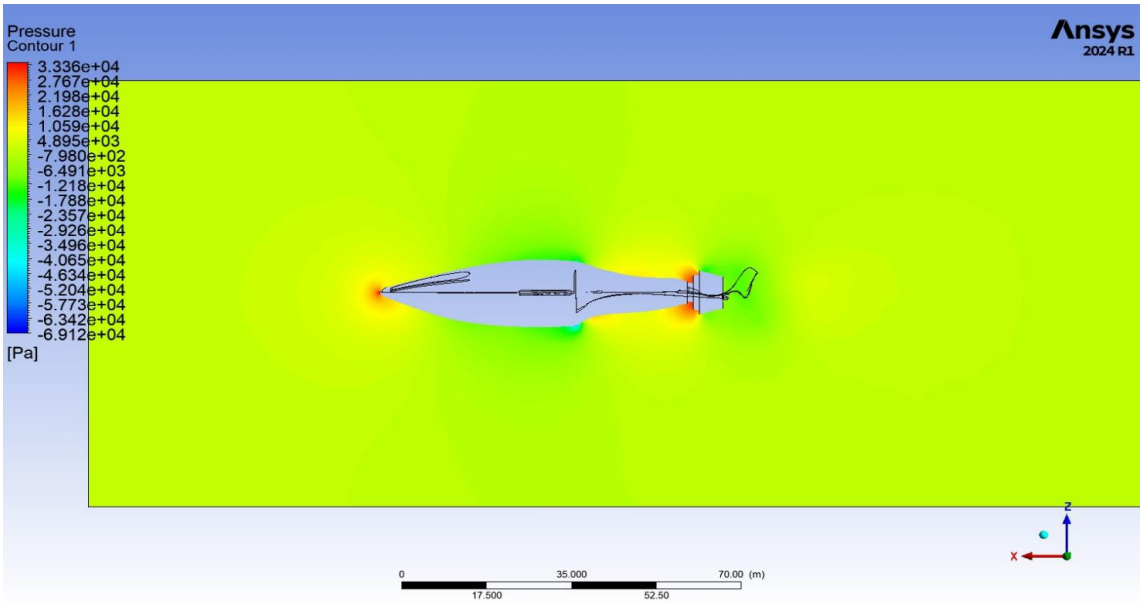

Figure 4.2(a) pressure contours of innovative submarine

At the front of the submarine, we are getting pressure of 3.336 x 10^4 Pa

At the center of the submarine, we getting the pressure between 2.767 x 10^4 to -1.21 x 10^4

We can even see separation being formed

At the end we are getting the pressure of -1.788 x 10^4

IJRAME

INTERNATIONAL JOURNAL OF RESEARCH IN AERONAUTICAL AND MECHANICAL ENGINEERING
WWW.IJRAME.COM
ISSN (ONLINE): 2321-3051

Vol.12 Issue 12, December 2024
Pg:- 17 - 35

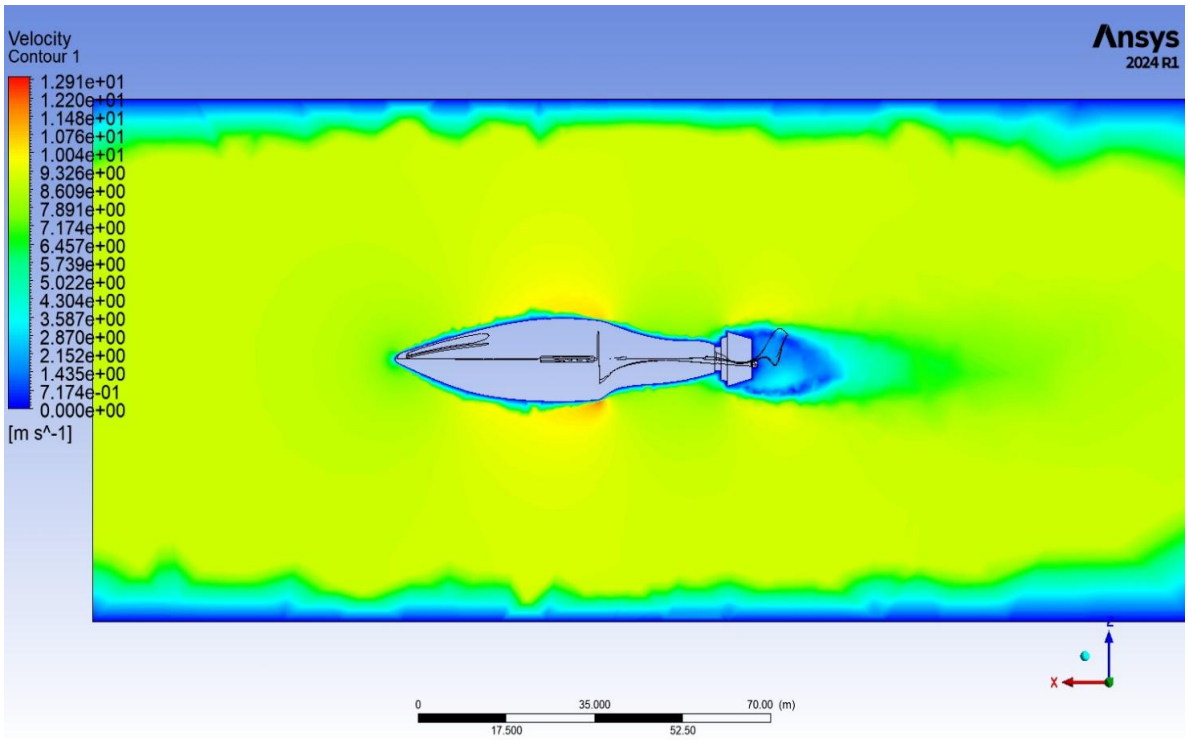

Figure 4.2(b) Velocity contours of Innovative submarine

In this result we see that the maximum velocity is 9.32 m/s which forms a boundary layer around the submarine we can even see vortexes being formed at the end of the submarine.

	Traditional submarine	Innovative submarine
Velocity	9.78 m/s	9.32 m/s
Pressure at front	4.547 x 10^4 Pa	3.336 x 10^4 Pa
Coefficient of drag	11.3982	12.92
Coefficient of lift	1.7146	0.033
lift	4598132.03756 N	42222169.8942 N
drag	30567146.0345 N	110852.8159 N

5. Conclusion and future scope

In this we can conclude that the innovative design gives lower lift and drag also the traditional submarine. By which we can conclude that innovative design is effective than the traditional design I regards of hydrodynamic forces. The future of submarine shell analysis and design holds great pledge with several instigative avenues for disquisition. Advanced accoutrements exploration will continue to push the boundaries of submarine construction, exploring feather light yet durable accoutrements like advanced mixes and Meta materials. Bio mimetic design principles offer alleviation from nature for optimized hydrodynamic performance, while advancements in computational fluid dynamics (CFD) will enable more accurate simulations of inflow patterns around submarine shells. Integration of propulsion systems, concentrate on environmental sustainability, and rigorous confirmation of simulation models are also crucial areas for unborn exploration. Also, exploring multi-objective optimization ways and advancements in independent submarine technology will further enhance the effectiveness and capabilities of coming- generation submarines. Overall, interdisciplinary collaboration and invention will drive advancements in submarine technology, paving the way for safer, more effective, and environmentally sustainable aquatic disquisition and defence systems.

References

1. Li, Y., Li, H., & Wu, Z. (2021). Hydrodynamic performance analysis of submarine shell based on CFD simulation. *Ocean Engineering*, 219, 108336.
2. Lin, J., Cai, J., & Zhang, Y. (2019). Analysis of submarine hydrodynamic performance based on different hull forms. *Journal of Marine Science and Engineering*, 7(4), 113.
3. Vaz, G. J., Das, A., & Sharma, P. (2020). Hydrodynamic analysis of conventional and morphing submarine hull form. *International Journal of Naval Architecture and Ocean Engineering*, 12, 505-518.
4. Wang, W., Yu, H., & Zhao, X. (2018). Numerical investigation on hydrodynamic performance of submarine hulls with different geometries. *Applied Ocean Research*, 73, 125-138.
5. Lee, S. W., Kim, J. H., & Kim, M. H. (2017). Hydrodynamic analysis of submarine hull with biomimetic design. *Journal of Marine Science and Technology*, 22(3), 480-489.
6. Bhattacharya, S., & Sahoo, P. K. (2019). Analysis of hydrodynamic characteristics of submarine hull forms using CFD simulations. *Journal of Marine Engineering & Technology*, 18(3), 135-145.
7. Chen, X., Wei, Z., & Zhang, L. (2020). Hydrodynamic performance analysis of submarine hull form based on numerical simulation. *Journal of Marine Science and Application*, 19(4), 647-657.
8. Guo, Y., Yu, Q., & Zhang, X. (2021). Numerical simulation and analysis of hydrodynamic performance of submarine hull based on Fluent. *Journal of Ocean University of China*, 20(3), 459-467.
9. Hu, J., Liu, X., & Zhang, Y. (2018). Hydrodynamic analysis of submarine hull with different

control surfaces. *Journal of Hydrodynamics*, 30(4), 543-553.

10. Kim, S., Lee, D., & Park, K. (2019). Analysis of hydrodynamic characteristics of submarine hulls with varying fin configurations. *Journal of Marine Engineering and Technology*, 18(1), 1-11.
11. Liu, H., Ma, L., & Zhang, W. (2020). Numerical simulation of hydrodynamic performance of submarine hull with innovative propulsion system. *Applied Ocean Research*, 97, 102063.
12. Sharma, A., Sharma, S., & Sharma, R. (2017). Hydrodynamic analysis of submarine hull form using ANSYS Fluent. *International Journal of Naval Architecture and Ocean Engineering*, 9, 190-200.
13. Yang, X., Dong, X., & Li, J. (2018). Numerical investigation on hydrodynamic performance of submarine hull forms with different appendages. *Journal of Ship Mechanics*, 22(5), 635-646.
14. Zhang, H., Ma, X., & Liu, S. (2021). Hydrodynamic performance analysis of submarine hull forms using computational fluid dynamics. *Marine Structures*, 79, 103972.
15. Zhu, Q., Li, H., & Liu, J. (2019). Hydrodynamic analysis of submarine hull with non-uniform cross-section using CFD simulation. *Journal of Marine Science and Engineering*, 7(2), 50

A brief Author biography

Dhruv Padhi **–** Dhruv Satyajit Padhi is currently pursuing a Master's degree in Aerospace Engineering at Ajeenkya D.Y. Patil University, Pune. His academic and professional interests are centered around Aerodynamics, Design, and Structures, complemented by his proficiency in software tools such as SolidWorks, CATIA, and ANSYS Fluent. Dhruv has gained practical experience through internships at Astromeda Private Limited, where he further honed his technical skills. He is deeply dedicated to advancing his expertise and contributing to the dynamic and innovative field of Aerospace Engineering.

Prathamesh Sapale **–**Prathamesh Sapale, a graduate in Aerospace Engineering from Sandip University, Nashik, is passionate about aerodynamics, design, and system integration. Proficient in SolidWorks, CATIA, AutoCAD, and Mission Planner, he combines technical skills with hands-on experience. Prathamesh has interned at AIESL (Air India Engineering Services Limited), AIRBOTS Aerospace, and KIKSHIFT, gaining exposure to aircraft maintenance, drone design, and automotive quality assurance. He also worked as a part-time design intern at Shrikant Enterprises, an automobile parts manufacturer, using SolidWorks and AutoCAD for 3D and 2D designs. His diverse experience in R&D, system integration, and compliance has built a solid engineering foundation. Committed to continuous learning, Prathamesh aims to contribute to innovations in aerospace and automotive industries.

Aman Surani **–**Aman Surani, a graduate of B.Tech in Aerospace Engineering from Sandip University, Nashik, Maharashtra, has a strong passion for astrodynamics, advanced propulsion systems, design, and space exploration. He has honed his skills through internships at esteemed organizations such as SAC-ISRO Ahmedabad, Astromeda Bengaluru, and Jyoti CNC Automation Ltd., Rajkot. Aman is dedicated to advancing his knowledge and contributing to the ever-evolving field of aerospace engineering.

Aniket Khairnar **–**Currently pursuing a Master in Aerospace Engineering at Ajeenkya D Y Patil University, Pune, Aniket Khairnar has cultivated a strong interest in Aerodynamics, design, and CFD. He is skilled in software tools like Solidworks, Analysis and Mission Planner, which complement his academic learning. Through Apprenticeship at Government companies

such as DRDO (Armament Research And Development Establishment, ARDE) he has acquired practical insights into the industry. Aniket remains passionate about advancing his expertise in the dynamic domain of aerospace engineering.